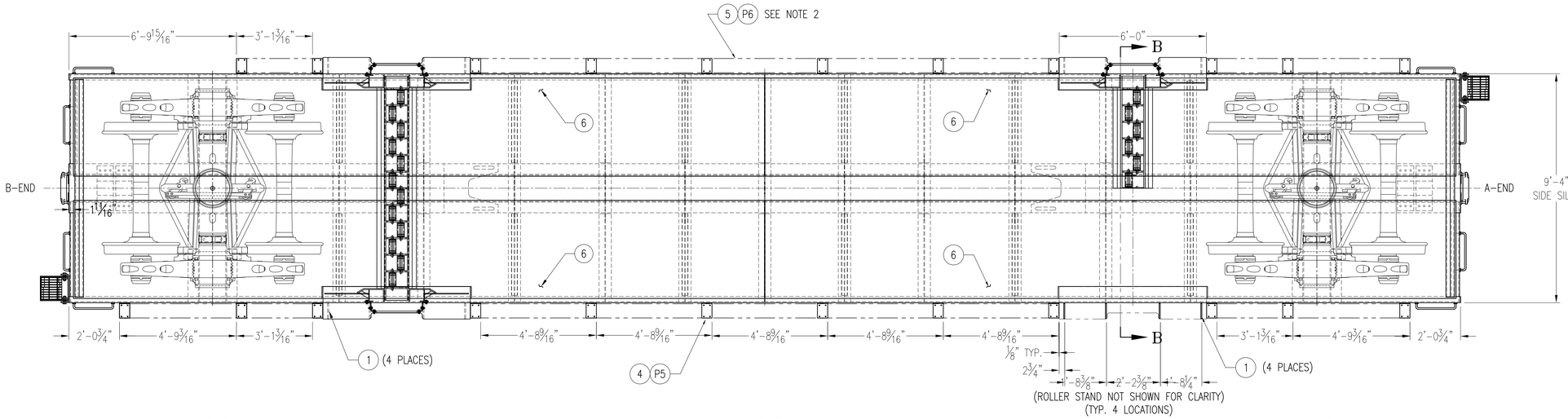

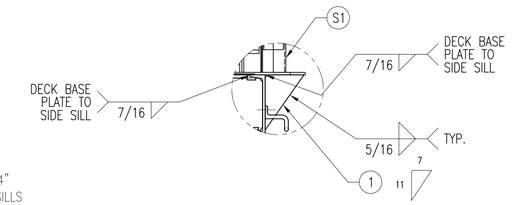

DETAIL "B"
2X SCALE

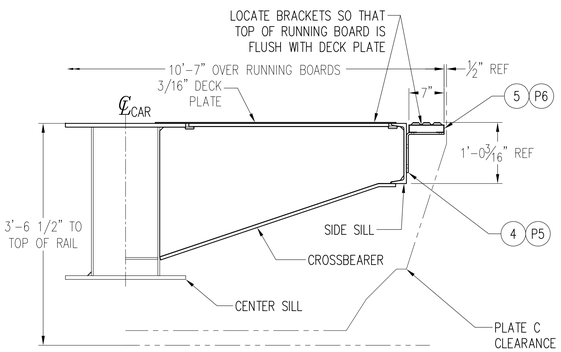

SECTION A–A
2X SCALE

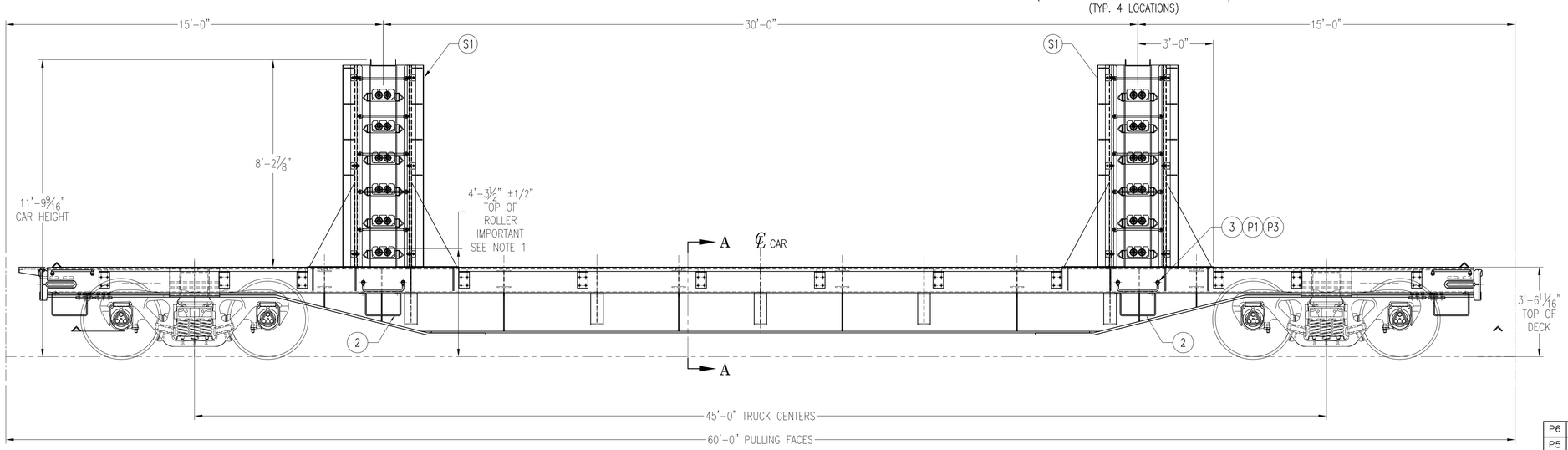

SHEET 1 NOTES:
1. SHOP MUST VERIFY COMPLIANCE TO THIS CRITICAL DIMENSION ON BOTH STANDS AND EVERY CAR PRIOR TO RELEASE.
2. SHOP TO CUT AND APPLY RUNNING BOARDS TO BEST FIT BRACKET LAYOUT – APPROX 80 LINEAR FEET.
3. SHOP TO SIZE SECUREMENTS FOR PROPER LENGTH – CHISEL CHECK OR TACK ALL BOLTS AFTER TIGHTENING.
4. HUCK TYPE FASTENERS MAY BE SUBSTITUTED FOR BOLTS & NUTS.

P6	BOLT, HEX W/NUT – 3/8"–16 UNC – SEE NOTES 3 & 4		92	
P5	BOLT, HEX W/NUT – 5/8"–11 UNC – SEE NOTES 3 & 4		92	
P4	WEDGE WASHER	McMASTER–CARR	8	91573A035
P3	HUCKBOLT COLLAR – 5/8"	HUCK	16	3LC–2R–20
P2	HUCKBOLT PIN – 5/8"	HUCK	8	C50LR–BR20–20
P1	HUCKBOLT PIN – 5/8"	HUCK	8	C50LR–BR20–12
	PURCHASED PARTS	**VENDOR**	**QTY.**	**PART NUMBER**

S1	ROLLER STAND	WESTRAIL	2	WR64100–G
	SUB-ASSEMBLIES	**VENDOR**	**QTY.**	**PART NUMBER**

6	FLOOR SHEET – 3/16" X 4' X 28'–2"	A572–50	4	KR07–2–13–01
5	PLATE TYPE RUN BD–GALVANIZED 1 1/2" X 7" X 14 GA.	GRIP STRUT	80 LF	KR07–2–23
4	RUNNING BOARD BRACKET – 3/8" X 5" X 1'–2 13/16"	A36	23	KR07–2–7–04
3	GRAB–DOUBLE OFFSET – ø3/4" X 1'–7"	ASTM A–576 C1015/C1020.	4	KR07–2–7–03
2	SILL STEP – 1/2" X 2" X 3'–7 1/8"	ASTM A–576 C1015/C1020.	4	KR07–2–7–02
1	GUSSET – 1/2" X 7 3/4" X 11"	A36	16	KR07–2–7–01
	DESCRIPTION/BLANK SIZE	**MATERIAL**	**QTY.**	**PART NUMBER**

LIST OF MATERIALS

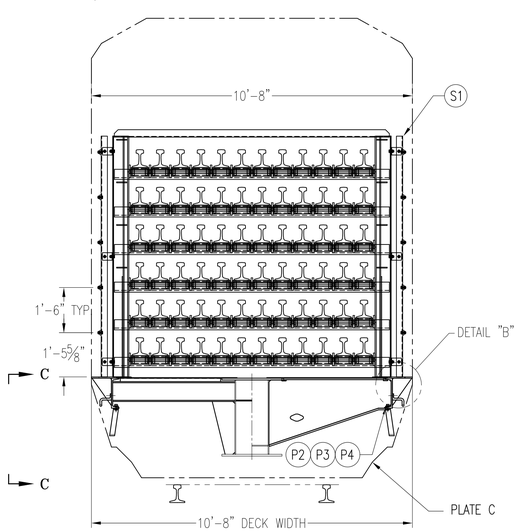

SECTION B–B

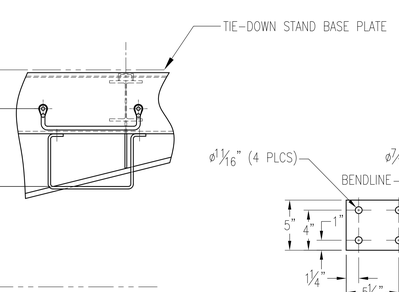

VIEW C–C
2X SCALE

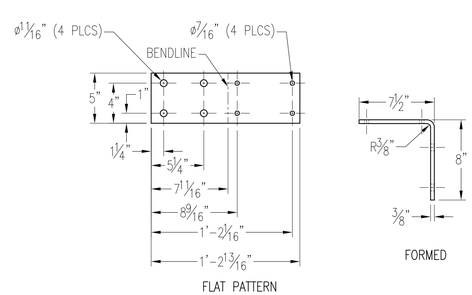

4 RUNNING BOARD BRACKET
4X SCALE

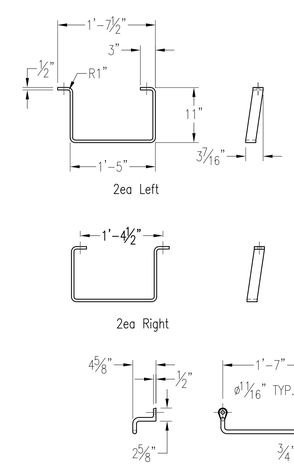

3 GRAB–DOUBLE OFFSET
2X SCALE

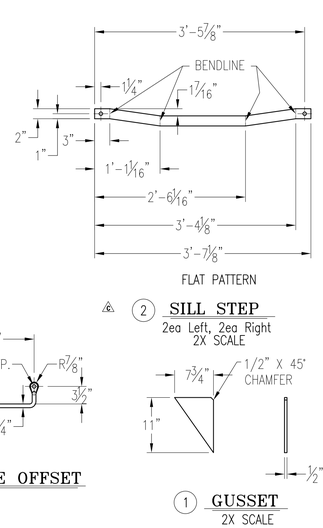

1 GUSSET
2X SCALE

REV.	BY	DATE
D	EBT	2/14/08
C	DJ	2/12/08
B	EBT	2/1/08
A	EBT	1/25/08

COPYRIGHT 2008 TRANSPORTATION TECHNOLOGY SERVICES, INC.

DRAWN: WDG
DATE: 1/8/08
CHECKED: EBT
DATE:

TOLERANCES:
UNLESS NOTED:
DIMS: ± 1/8"
ANGLES: ± 1°
HOLE Ø: ± 1/32"

Transportation Technology Services
1723 E Southlake Blvd, Ste 100
Southlake, TX 76092

MOW 6X12 RIBBON RAIL ROLLER CAR-GEN ASSY

SCALE:	NEXT ASSEMBLY NO.	DRAWING NO.	SHT.
1=30		KR07-2-7	1/1

ALL INFORMATION CONTAINED HEREIN IS THE PROPERTY OF TRANSPORTATION TECHNOLOGY SERVICES, INC AND SHALL NOT BE USED, DISTRIBUTED OR COPIED WITHOUT WRITTEN CONSENT FROM SAID COMPANIES.